Kubota

KUBOTA TIGHT TAIL SWING COMPACT EXCAVATOR

U

U55-4

Superior 5-ton tight tail swing excavator with the power and flexibility to work wonders in narrow spaces.

CLEAN AND POWERFUL EXCAVATOR

Set to redefine the entire 5-ton class, this Kubota compact excavator with a deluxe cab puts you in luxury and on top of almost any challenge.

Automatic regeneration system

Kubota's original automatic regeneration system automatically burns accumulated particulate matter (soot) in the DPF muffler to keep the muffler clean for longer operation. For safety reasons, automatic regeneration can be turned off with the inhibit switch when the excavator is operating in areas that are prone to fires.

Introducing ECO PLUS

Kubota's original ECO PLUS prioritizes fuel economy, and supports the environment.

For tough digging applications, use Standard Mode and experience a 5% productivity improvement over the prior model on U55-4.

Activate Eco Mode with the flick of a switch for up to 9% fuel savings over Standard Mode on new U55-4.

Eco Mode Indicator

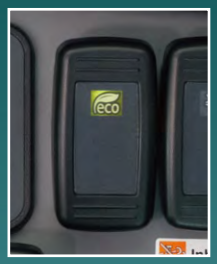

Eco Mode Switch

STANDARD MODE
- **Improved Productivity** *Compared to Prior Model*

5% Productivity Increase

ECO MODE
- **Focus on Lower Fuel Consumption**

Productivity Same as Prior Model

Save 9%*

**Compared to Standard Mode*

SUPERIOR PERFORMANCE

Combining the power for demanding jobs and the versatility to work in any condition, the Kubota U55-4 is ready to take on most challenges. It's designed with excellent stability to work with a variety of attachments. Versatility is greatly enhanced with precise oil flow control for auxiliary circuits. With upgraded digging and lifting power, smoother travel performance and improved versatility, this Kubota truly has it all.

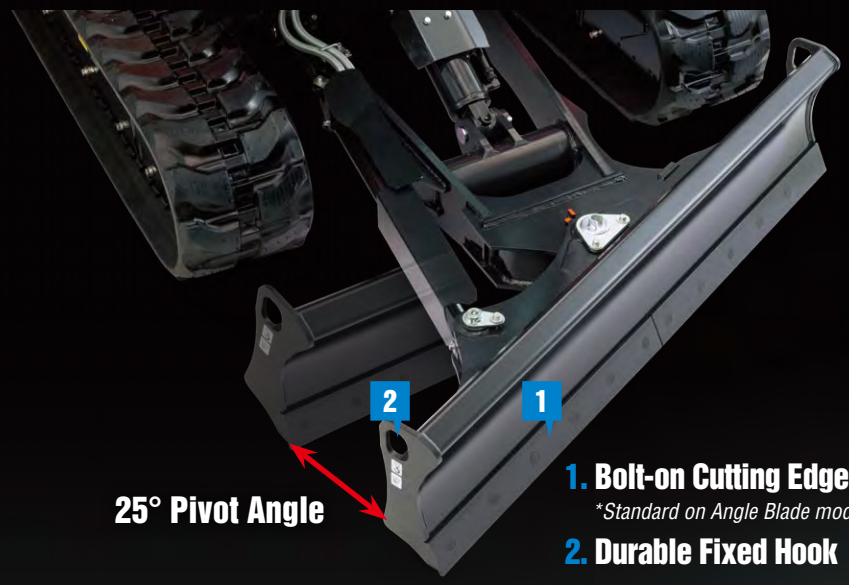

1. Bolt-on Cutting Edge*
**Standard on Angle Blade models.*

2. Durable Fixed Hook

Hydraulic Angle Blade

Save time and work more efficiently. With a simple movement of the dozer lever, the hydraulic angle blade can be angled to the right or left to push soil to the side as the machine moves forward, eliminating the need for repetitive repositioning at right angles when backfilling trenches.

Float Position

The float function is a standard feature on the U55-4*. Ground finishing work can be completed quickly and simply without the need to adjust the dozer height. After backfilling, simply travel backwards along the covered ditch with the dozer in the float position.

**Standard on both angle blade & standard blade models.*

Generous Approach Angle

The angle blade boasts an approach angle of 28°, allowing the U55-4 to climb over obstacles with ease.

Tight Spots

The angle blade lets you work efficiently in confined spaces, alongside walls, and near busy roads. No wider than the tracks, it's also easy to transport between jobs.

Easy Operation

Angle blade operation has been enhanced for easier control. Up, down and float movements are made with a single lever, while left and right angle positioning is made by the rocker switch on top of the lever.

Hydraulic Dozer Control Lever

A hydraulic-type dozer control lever provides smooth and easy operation.

Adjustable Maximum Oil Flow Control For Auxiliary Circuits 1 & 2 (Optional)

The maximum oil flow settings of both circuits are conveniently adjustable from the digital panel – no additional tools or complex manual adjusting procedures are necessary. You can even program up to five oil flow rates corresponding to specific attachments into memory on the digital panel.

Variable Speed Fan Drive

The new variable speed cooling fan matches fan power to engine cooling requirements, resulting in greater fuel efficiency.

Enhanced Digging Force

The U55-4 delivers an impressive bucket digging force of 11,177 lbs. Its powerful and well-balanced arm and bucket allow the operator to dig faster and more efficiently even in the toughest conditions.

Tight Tail Swing

With its counterweight protruding a mere 2.5 inches, this tight tail swing model proves to be highly versatile when undertaking operations wherever space is confined.

Increased Travel Speed

Featuring increased maximum high and low travel speeds of 3.1 mph and 1.8 mph respectively, the KX057-4 truly takes productivity to new heights.

Increased Traction Force

The traction, when operating in low speed, has been increased to 14,480 lbs. This helps ensure an efficient and productive day on the job.

Auxiliary 1 Diverter Valve*

With the AUX1 diverter valve, the AUX oil supply can be changed without having to remove the thumb pipeline when the operator wants to use a hydraulic attachment.

**fonly for AUX1 model.*

Thumb Bracket And Relief Valves

The hydraulic thumb makes short work of a variety of loading and material handling jobs. The factory installed mount brackets and hydraulics significantly reduce the time needed to mount accessories.

Load Sensing Hydraulic System

Kubota's improved 3-pump load sensing hydraulic system ensures smoother operation, regardless of load size. It allows hydraulic oil to flow according to the specific range of the operator's lever motion. The result is greater fuel economy and smoother travelling.

Auto-shift

The auto-shift system enables automatic travel shift from high to low depending on traction effort and terrain. This gives smoother simultaneous operations when dozing and turning.

One-sided Engine Maintenance

Kubota has made routine maintenance extremely simple by consolidating primary engine components onto one side for easier access. Engine and other vital components can be inspected quickly and easily.

A. DPF Muffler
B. Alternator
C. Water Separator
D. Starter Motor

E. Dual Element Air Cleaner
F. Fuel Filter

Tool Box

A large tool box is positioned within the side hood so necessary tools for small checkups are always within easy reach.

Refuelling

When refuelling, simply press the refuelling signal button to monitor the progress. The beeping signal accelerates as the fuel approaches full and thus avoiding spillage.

MAINTENANCE & SAFETY

Although your Kubota excavator is state-of-the-art, its maintenance doesn't get much easier. Thanks to the full-opening rear and right side hoods, engine, control valves and various components are accessible for easy inspection and repair.

Steel Panels

The U55-4 features long-lasting side panels that open easily for quick inspection and routine maintenance. The panels are located inside the counterweight edge for protection and durability.

Parking Brake

A travel negative brake comes as a standard safety feature on the U55-4 for added peace of mind during transportation or parking on hilly areas.

Grease Gun Holder

A convenient space within the side hood is designed to keep the grease gun handy for daily servicing.

U55 OPTIONS

STANDARD EQUIPMENT

Safety system
- Engine start safety system
- Travel motor with disc brake
- Swivel motor with disc brake
- All hydraulic control

Working equipment
- Auxiliary hydraulic circuit 1
- 2 working lights on cab and 1 light on the boom
- Dozer blade with float function
- Thumb bracket and relief valve

Operator's Space
- ROPS/OPG (TOP Guard, Level Ⅰ) canopy
- Weight-adjustable full suspension seat
- Retractable seat belt
- Hydraulic pilot control levers with wrist rests
- Travel levers with foot pedals
- Two pattern selection system
- Digital panel
- 12V power source
- Cup holder
- Horn

Engine/Fuel system
- Double element air filter
- Auto idling system
- Water separator with drain cock

Undercarriage
- Dozer blade with float
- 400 mm rubber track
- 1 × upper track roller
- 5 double-flange track rollers on each side
- 2-speed travel switch on dozer lever
- 2-speed travel with auto-shift

Hydraulic system
- 3-pump load sensing system
- Pressure accumulator
- Hydraulic pressure checking ports
- Straight travel circuit
- Third line hydraulic return
- Adjustable maximum oil flow on auxiliary hydraulic circuits 1 (and 2)
- Auxiliary switch (AUX1) on right control lever

Others
- Tool box
- Grease gun holder

OPTIONAL EQUIPMENT
- Cab with A/C
- Canopy lights
- Rear working lights
- Beacon lights
- 1′3.7″ (400 mm) steel track for Angle blade model
- Additional auxiliary hydraulic circuit 2 (adjustable max. oil flow control)
- Angle blade with float function and BOE
- Travel alarm

WORKING RANGE

Model				U55-4
A	Max. digging height		ft. in. (mm)	18'3.7" (5580)
B	Max. dumping height		ft. in. (mm)	13'2.3" (4020)
C	Max. digging depth		ft. in. (mm)	11'10.3" (3615)
D	Max. vertical digging depth		ft. in. (mm)	4'11.6" (1515)
E	Max. digging radius at ground		ft. in. (mm)	19'6.1" (5945)
F	Max. digging radius		ft. in. (mm)	19'11.4" (6080)
G	Min. turning radius	W/O swing	ft. in. (mm)	8'0.8" (2460)
		W swing	ft. in. (mm)	6'9.9" (2080)
H	Min. tail turning radius		ft. in. (mm)	3'5.1" (1045)

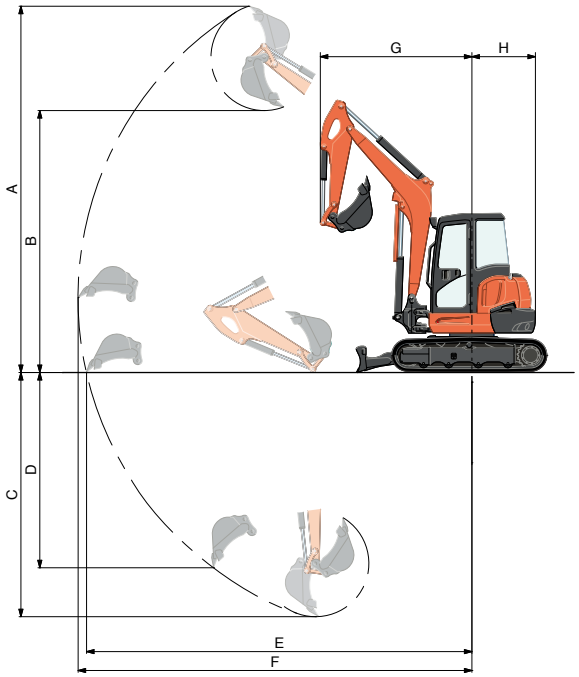

LIFTING CAPACITY

Canopy rubber

LIFT POINT HEIGHT (ft)		LIFTING CAPACITY OVER-FRONT BLADE DOWN unit=1000 lbs			LIFTING CAPACITY OVER-SIDE unit=1000 lbs		
		LIFT POINT RADIUS (ft)			LIFT POINT RADIUS (ft)		
		12	16	MAX	12	16	MAX
	10	2.62	-	-	2.07	-	-
	8	2.92	2.51	2.33	2.01	1.27	1.19
	4	3.70	2.70	2.47	1.85	1.22	1.09
GL	0	4.07	2.75	2.57	1.74	1.18	1.11

Machine with canopy and rubber crawler, without bucket

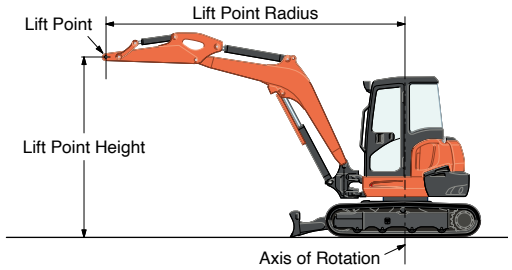

SPECIFICATIONS

Model				U55-4	U55-4 Angle Blade
Type of ROPS / OPG (TOP Guard, Level Ⅰ)				Canopy / Cab	
Type of tracks				Rubber	Rubber / Steel
Engine	Model			V2607-CR-E4	
	Output (SAE J1995 gross)		HP (kW) / rpm	47.6 (35.5) / 2200	
	Output (SAE J1349 net)		HP (kW) / rpm	45.2 (33.7) / 2200	
	Displacement		cu. in. (cc)	159.6 (2615)	
Dimensions	Overall length		ft. in. (mm)	18'0.5" (5500)	
	Overall height		ft. in. (mm)	8'4.4" (2550)	
	Overall width		ft. in. (mm)	6'5.2" (1960)	
	Min. ground clearance		in. (mm)	1'0.2" (310)	
Hydraulic system	Pump capacity		GPM (ℓ/min)	14.8 (56.1) Variable × 2 / 9.8 (37.0) Gear × 1	
	Auxiliary hydraulic flow	AUX1 / AUX2	GPM (ℓ/min)	19.8 (75) / 9.8 (37)	
	Max. breakout force	Bucket / Arm	lbs. (kgf)	11177 (5070) / 6261 (2840)	
Drive system	Travel speed	Low / High	mph (km/h)	1.8 / 3.1 (2.8 / 4.9)	
	Max. traction force	Low speed	lbs. (kgf)	14480 (6567)	
	Tumbler distance		ft. in. (mm)	6'6.3" (1990)	
	Crawler length		ft. in. (mm)	8'2.4" (2500)	
	Shoe width	Rubber / Steel	in. (mm)	1'3.7" (400)	
	Ground contact pressure	Rubber Canopy / Cab	psi (kgf/cm^2)	4.42 (0.311) / 4.51 (0.317)	4.58 (0.322) / 4.65 (0.317)
		Steel Canopy / Cab	psi (kgf/cm^2)	-	4.66 (0.328) / 4.74 (0.333)
Swing system	Unit swing speed		rpm	9.3	
	Boom swing angle	Left / Right	degree	70 / 55	
Blade	Dimensions	Width	ft. in. (mm)	6'5.2" (1960)	
		Height	ft. in. (mm)	1'4.1" (410)	1'4.7" (425)
	Max. lift above ground		in. (mm)	17.3" (440)	20.0" (510)
	Max. drop below ground		in. (mm)	16.1" (410)	18.3" (465)
	Angle	Left / Right	degree	-	25
Hydraulic oil (Reservoir / System)			gal (ℓ)	11.9 (45) / 20.9 (79)	
Fuel reservoir			gal (ℓ)	18.0 (68)	
Operating weight (Including operator's weight @ 175 lbs.)		Rubber Canopy / Cab	lbs. (kgf)	11915 (5405) / 12115 (5495)	12335 (5595) / 12535 (5685)
		Steel Canopy / Cab	lbs. (kgf)	-	12555 (5695) / 12755 (5785)

The company reserves the right to change the above specifications without notice. This brochure is for descriptive purposes only. Please contact your local Kubota dealer for warranty infomation. For your safety, Kubota strongly recommends the use of a Rollover Protective Structure (ROPS) and seat belt for almost all applications.

DIMENSIONS

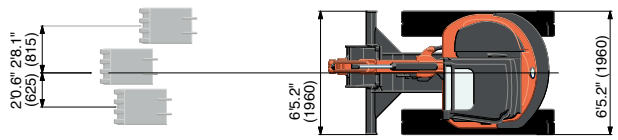

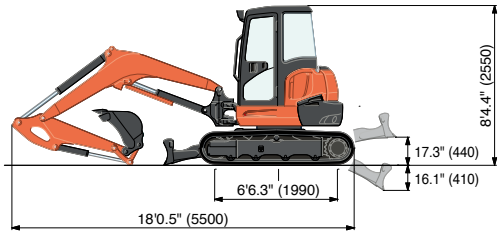

Unit: ft. in. (mm)

©2013 Kubota Corporation

KUBOTA TRACTOR CORPORATION

Kubota Tractor Corporation, 3401 Del Amo Boulevard, Torrance CA 90503
Western Division: 1175 S. Guild Ave., Lodi, CA 95240 Tel (209) 334-9910
Central Division: 14855 FAA Boulevard, Fort Worth, TX 76155 Tel (817) 571-0900
Northern Division: 6300 at One Kubota Way, Groveport, OH 43125 Tel (614) 835-1100
Southeast Division: 1025 Northbrook Parkway, Suwanee, GA 30024 Tel (770) 995-8855

Visit our web site at: www.kubota.com

ROPS SEATBELT
PUT 'EM ON – KEEP 'EM ON
SAFETY
IT'S THE WAY TO LIVE!®

Cat. No.8869-01-US Printed in Japan '14-11D. ◁▷. 0.